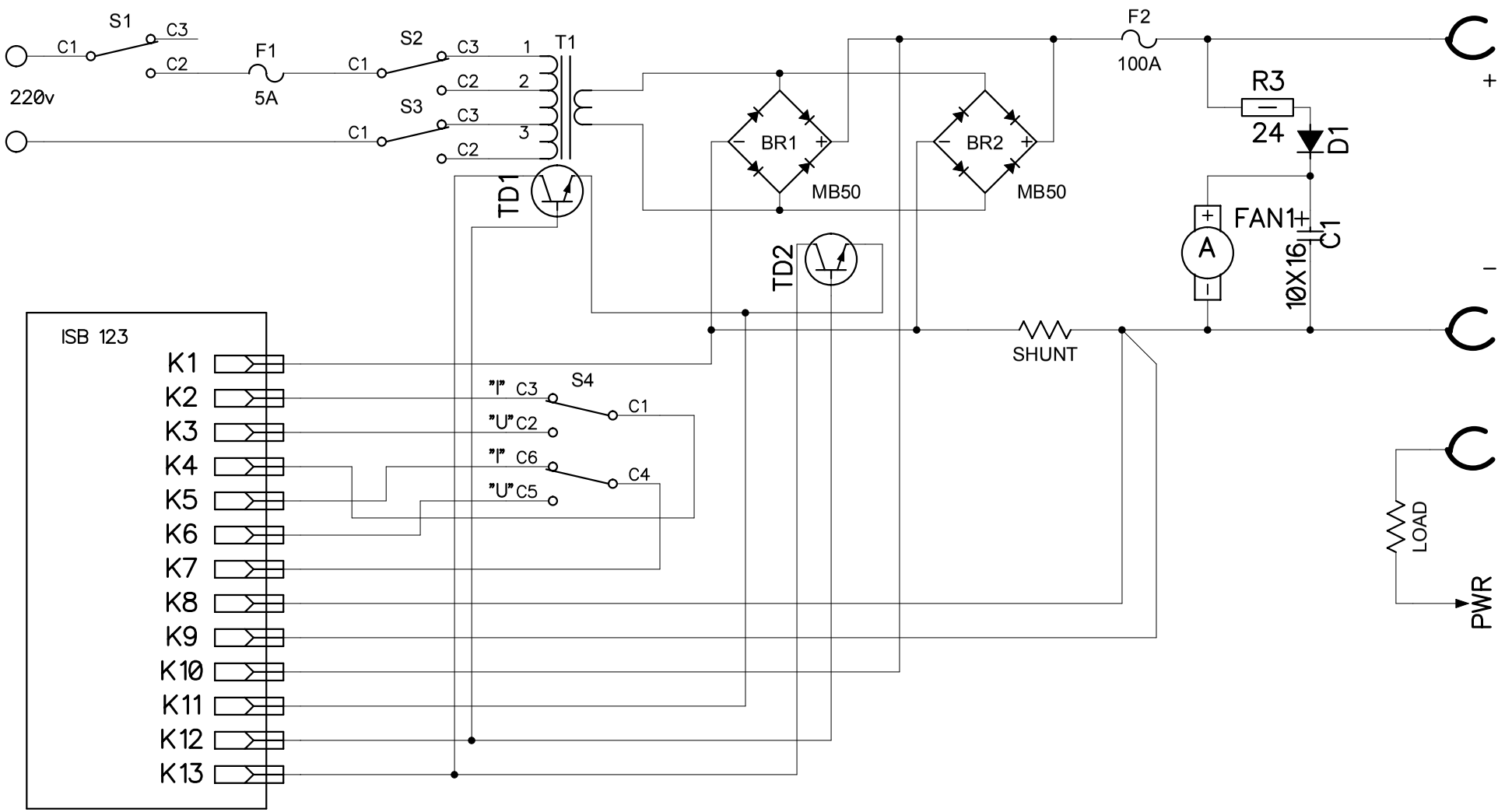

T1007U		
Size A4	Number AAB-00-07PE3	Rev
Date Wed Dec 28, 2005		Drawn by Lyzhin
Filename T1007U_OLD.sch		Sheet of